KiLi–LED

# VFR Series

The vapor tight fixture is a cost effective and energy efficient alternative to traditional fluorescent tubes or strip light fixtures. Featuring a full-length, casketed polycarbonate lens and single piece non-corrosive polycarbonate body, this vapor tight led is protected with IP66 rating, sealed and casketed against dust, dirt, and humidity, making it ideal for both indoor and outdoor harsh environments applications, including utility lighting, parking garages, freezers and cold storage facilities, food processing, car washes, stairwell lighting and low bay lighting. Additionally, ceiling or surface mounted, this led tri proof light has an initial lumen range of 105-150LPW, and features 0-10V dimming standards. As well, this model comes with a motion sensor for maximum energy savings as well as 90 mins emergency battery backup options.

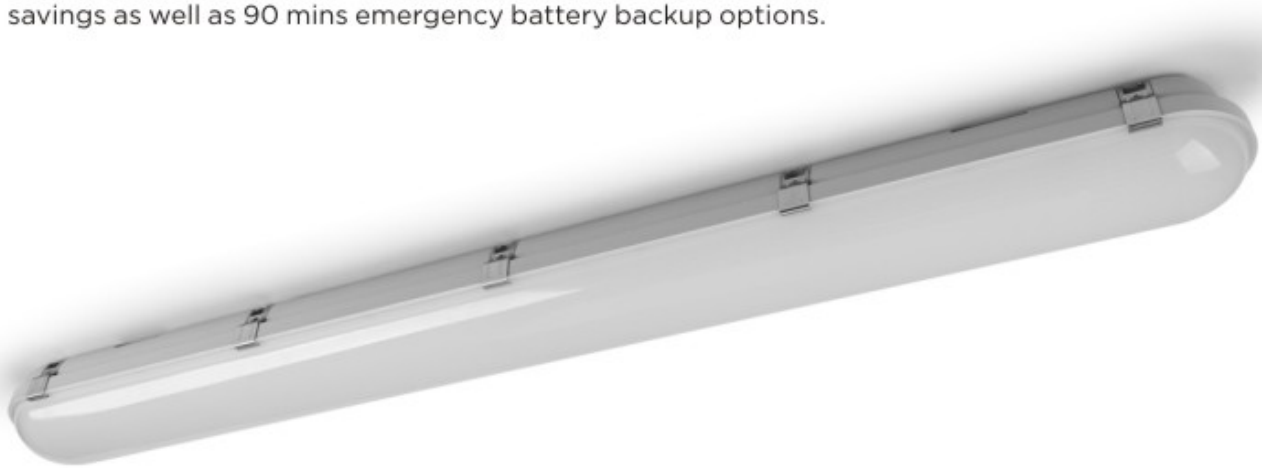

IK08 IP66 RoHS c UL us LISTED DLC PREMIUM SUITANLE FOR WET LOCATIONS 5 YEAR

## FEATURES

- UL/cUL listed for wet locations, IP66 rated
- DLC 4.4 Premium certified
- 105-150 lumens per watt
- 100-277V universal voltage
- 0-10V dimming optional, 10-100%
- Microwave Motion Sensor for Bi-Level control
- 90 mins Emergency Battery Backup

## DIMENSION:(mm/in)

**VFRC&VFRE**

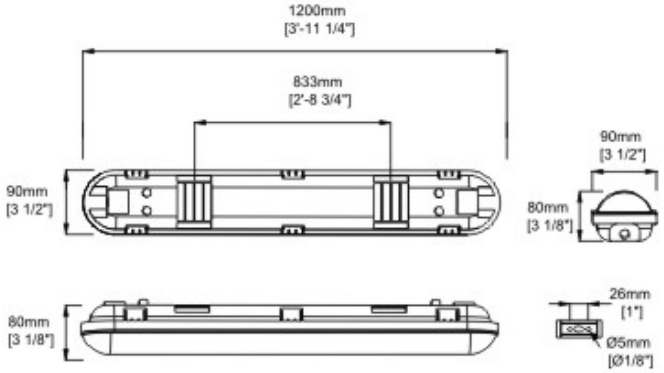


**VFRA&VFRB**

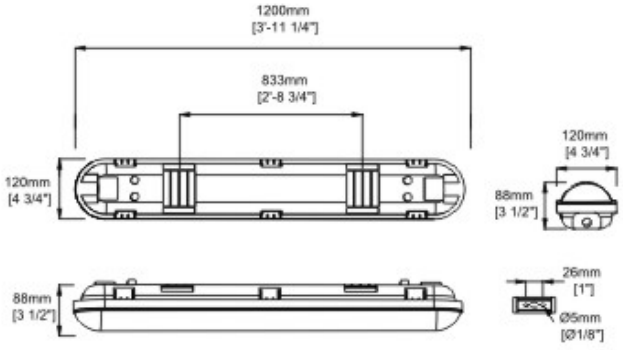

# VFR Series

## APPLICATIONS

- Wet areas
- Outside walkways
- Warehouses
- Storage areas
- Industrial units
- Farm buildings (Non-corrosive atmosphere)
- Garages
- Workshops
- Car parks
- Changing rooms
- Resistant to impace and many chemical agents, but for suitablility in specific environments please take specialist advice

## CONSTRUCTION

- Grey coloured polycarbonate
- Polycarbonate diffuser integrated with powder coated lighting tray
- Stainless steel clips
- Reinforced drill points in base for direct surface fixing, or conduit suspension.
- Stainless steel surface mounting clips
- Can also be suspended form wire/chain using clips provided

Supermarket

Farm buildings

Parking lot lighting

Warehouses

## PRODUCT DETAILS

The mounting brackets keep adjustable space for easy correction.

The light transmittance of PC cover is up to 92%. The integrated design of Lens Cover and LED Plate is more convenient to install and use.

The fixed clips are elegant, secure and easy to use.

# VFR Series

## TECHNICAL SPECIFICATION

- Input Voltage : 100-277VAC
- Driver Type : UL Approved Flicker-free
- Luminous Efficacy : up to 130lm/w
- Colour Rendering Index : > 80Ra
- LED Type : LM80 SMD2835
- Operating : Temperature:-40°C up to 50°C (-40°F up to 122°F)
- Color Temperature : 3000K/4000K/5000K/
- Material : Polycarbonate Body & Diffuser
- Ingress Protection : IP66
- Impact Rating : IK08
- Rated Life : 50,000 hours
- Warranty : 5 years

Family Model and Variation:
**VFRB4F**-XXXF[P,S]-[Blank,SR,EM,RM] **VFRB4F** = Family Series;
"XXX" denotes CCT, could be 40K: 4000K, 50K: 5000K;
F = Frosted cover, C= Clear cover;
[P,S] denotes capability of dimming, P = 0-10 V dimmimg,
S = Non-dimmable;
[Blank,SR,EM,RM] denotes product features, could be Blank,
SR: Sensor, EM: Emergency supply, RM: Sensor + Emergency supply.

USL, CNL – Light-emitting-diode surface-mounted Luminaires,
Models **VFRA4F**-XXXXP-XX, **VFRB4F**-XXXXP-XX, **VFRC4F**-XXXXP-XX,
**VFRB4F**-XXXXS-XX, **VFRE4F**-XXXXP-XX.

Where the first "XXX" indicate color temperature, can be any two digit plus K. The second "X" indicate diffuser type, can be F or C, F means frosted, C means clear. "P" indicate 0-10 V dimmable, "S" indicate non-dimmable. The third "XX" can be SR, EM, RM, SR means with Lighting Control, EM means with Emergency power, RM means with Lighting Control and Emergency power.

| Produce Code | VFRA4F-XXXXP | VFRB4F-XXXXP | VFRB4F-XXXXS | VFRE4F-XXXXP | VFRC4F-XXXXS |
|---|---|---|---|---|---|
| Power Consumption(W) | 60W | 40W | 40W | 22W | 40W |
| Lumens Delivered (lm) | 7800lm | 5200lm | 4200lm | 2860lm | 4200lm |
| Efficacy (lm/W) | 130lm/W(Frosted)<br>150lm/W(Clear) | 130lm/W(Frosted)<br>150lm/W(Clear) | 105lm/W(Frosted)<br>130lm/W(Clear) | 130lm/W(Frosted)<br>150lm/W(Clear) | 105lm/W(Frosted)<br>130lm/W(Clear) |
| Beam Angle | 120° | 120° | 120° | 120° | 120° |
| CRI | 80 | 80 | 80 | 80 | 80 |
| Power Factor | >0.9 | >0.9 | >0.9 | >0.9 | >0.9 |
| Housing | PC | PC | PC | PC | PC |
| Installation | Surface Mount/ Chain | Surface Mount/ Chain | Surface Mount/ Chain | Surface Mount/ Chain | Surface Mount/ Chain |
| Operating Temperature | -40°C up to 50°C (-40°F up to 122°F) | -40°C up to 50°C (-40°F up to 122°F) | -40°C up to 50°C (-40°F up to 122°F) | -40°C up to 50°C (-40°F up to 122°F) | -40°C up to 50°C (-40°F up to 122°F) |
| Certification | UL/cUL, DLC Premium | UL/cUL, DLC Premium | UL/cUL, DLC | UL/cUL, DLC Premium | UL/cUL, DLC |

## LUMINAIRE PHOTOMETRIC

**Cone illuminance Diagram:**

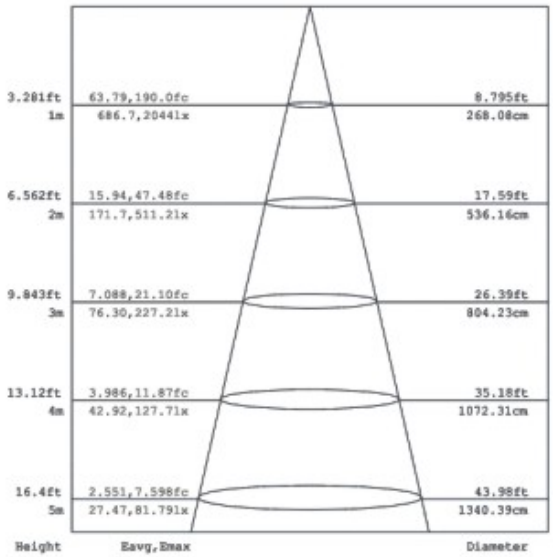


**Luminous Intensity Distrib ution Diagram:**

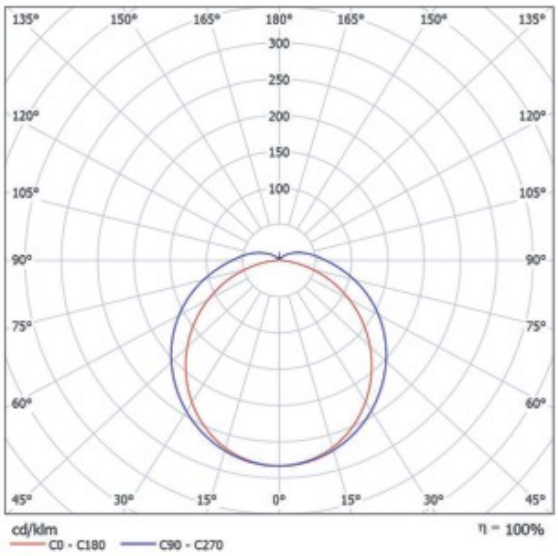

KiLi–LED

# VFR Series

## The IP66 non-corrosive that outperforms its competitors

PENDING ★★★ PATENTED ★★★ PENDING

**GOOD THERMAL MANAGEMENT.** Top of the range UL approved flicker-free driver installed on separate heat sink gear tray for good thermal management and long-life.

**ALL-POLYCARBONATE CONSTRUCTION.** V0 fire retardant polycarbonate ensure high standard of safety and maximum impact rate of IK08.

**REVOLUTIONARY DESIGN.** Advanced design of polycarbonate diffuse integrated with lighting tray provide significant protection on LEDs and saving on installtion and maintenance.

**MICRO-WAVE & EMERGENCY AVAILABLE.** Suitable for various kinds of applications.

**Not all non-corrosives are the same. If you are offared a lower-cost alternative to the VFR, check you are comparing like with like:**

- 5 years warranty is standard on VFR.
- UL/DLC approved, 50, 000 hour flicker-free drivers are standard on VFR.

# VFR Series

## Motion sensor is optional (BRI810-H-D)

### Utilizing Field And Introduction

BRI810-H-D is a moving object sensor that can detect range of 360°and it's working frequency is 5.8GHz. The advantage of this product is stable working state (stable working temperature : -40°C-+70°C), BRI810-H-D adopts a microwave sensor (high-frequency output<0.2mW), so that it is safe and performs better than infrared sensor.

BRI810-H-D

RC-100
(OPTIONAL)

### Function And Options

The microwave sensor to achieve tri-level dimming control, for same areas that require a light change notice before switch off.

If offers 3 levels of the light Control : 100%--dimming light (0,10%,30%,50%) --off; and 2 periods of selectable waiting time: motion hold-time and stand-by time. Selectable daylight threshold and choice of detection area.

With suffcient natural light, the light does not switch on when presence detected.

With insufficient natural light, the sensor switches on the light automatically when person enters room.

People left, light still dims to 0/10%/30%/50%(options) standby level after the hold time.

Light switches off automatically after after stand-by time elapsed.

## Emergency

VFRA Emergency LED Driver – R/C, FTBR2/8, rated 100-277V, 50/60Hz, 65mA, 4W input. 15-55Vdc, 850 mA, 13.5W output. Charge Time, 24 Hours. Run Time, 90 minutes.

VFRB Emergency LED Driver – R/C, FTBR2/8,rated 100-277V, 50/60Hz, 50mA, 2.5W input. 15-55Vdc, 470 mA, 7W output. Charge Time, 24 Hours. Run Time, 90 minutes.

VFRC,VFRE non-Emergency option

## PACKAGING

| Model No. | Qty (pcs) | L*W*H (CM) | QTY Per Carton | Carton QTY | NW. (kgs) | | G.W. (kgs) | | Meas. (CBM) | |
|---|---|---|---|---|---|---|---|---|---|---|
| | | | | | Per CTN | TOTAL | Per CTN | TOTAL | Per CTN | TOTAL |
| VFRA/VFRB | 6 | 123*28.5*31 | 6 | 1 | 15.2 | 15.2 | 16.5 | 16.5 | 0.11 | 0.11 |
| VFRC/VFRE | 9 | 123*31*30 | 9 | 1 | 15.5 | 15.5 | 16.8 | 16.8 | 0.11 | 0.11 |